P1CO-29FEL-07/15

2.92mm female end launch PCB connector, .007 inch (0.18mm) diameter pin.
Frequency DC to 40 GHz. Standard profile.

Product Features

P1CO-29FEL-07/12 is a 2.92mm female (jack) 50 Ohm connector that operates to 40 GHz. It is a standard profile edge launch connector that offers best electrical match when mating with Microstrip printed circuit boards. This 40 GHz connector is field replaceable (non- solder attachment to PCB). The connector material is passivated stainless steel.

Dimension (A) Board: The center contact (pin) diameter is .007 inch (0.18mm).

Dimension (B) Internal : The internal pin diameter is .015 inch (0.38mm).

Dimension (C) Dielectric: The dielectric diameter is .048 inch (1.22mm).

Compare to 1092-02A-5

Electrical Specification: $T_{Ambient}$ = 25° C

Parameter	Frequency Range	Units	Min	Typical	Max	Notes
Frequency Range		GHz	DC		40	
Impedance				50.0		

Mechanical And Environmental Specifications:

Parameter	Description	Notes
RoHS Compliance	Yes	

Drawing

P1dB, Inc. 188 Martinvale Lane, San Jose, CA 95119 +1(408)613-4857

sales@p1dB.com

P1CO-29FEL-07/15

2.92mm female end launch PCB connector, .007 inch (0.18mm) diameter pin.
Frequency DC to 40 GHz. Standard profile.

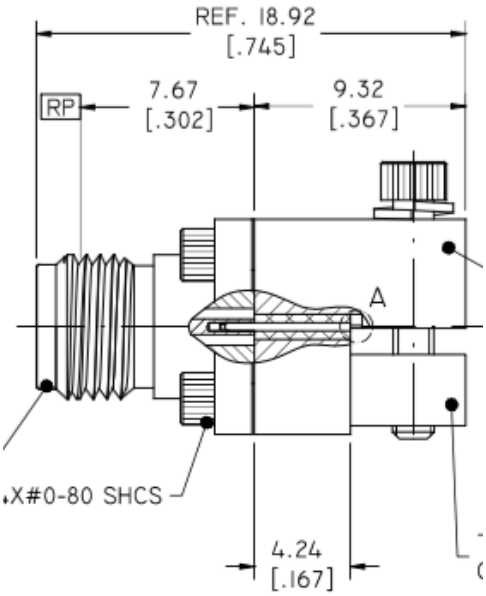

Graph

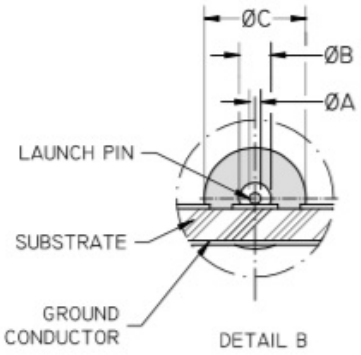

Product Notes

Temp range -55 to +125 deg C.

P1dB, Inc. 188 Martinvale Lane, San Jose, CA 95119 +1(408)613-4857

sales@p1dB.com