P1CO-SAF4-F012-27G

Connector, SMA Female, 4-Hole Panel Mount, Field Replaceable, Socket for .012 Pin, 27 GHz

Product Features

P1CO-SAF4-F012-27G is a 50 Ohm RF connector, SMA field replaceable, 4 hole flange mount that mates with a .012 inch pin.

Operating to 27 Ghz with a maximum VSWR of 1.20, the P1CO-SAF4-F012-27G features a passivated stainless steel body and includes an EMI gasket to reduce RF leakage.

Electrical Specification: $T_{Ambient}$ = 25° C

Parameter	Frequency Range	Units	Min	Typical	Max	Notes
Frequency Range		GHz	DC		27.0	
Impedance				50.0		

Mechanical And Environmental Specifications:

Parameter	Description	Notes
RoHS Compliance	Yes	

Drawing

P1dB, Inc. 188 Martinvale Lane, San Jose, CA 95119 +1(408)613-4857

sales@p1dB.com

P1CO-SAF4-F012-27G

Connector, SMA Female, 4-Hole Panel Mount, Field Replaceable, Socket for .012 Pin, 27 GHz

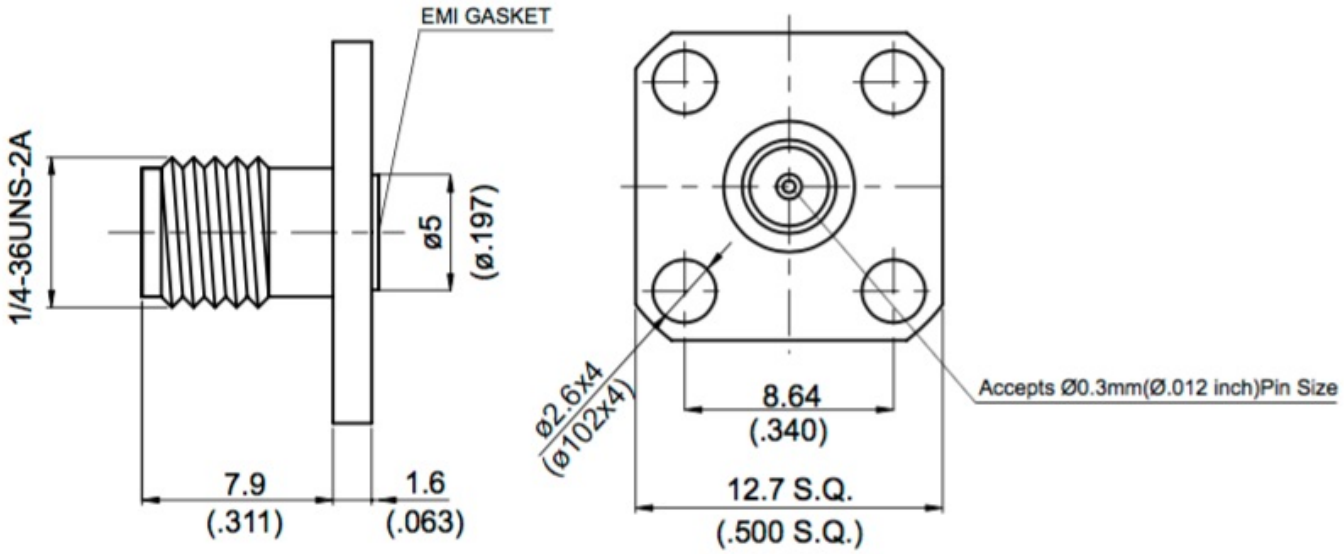

Graph

Parts	Material	Plating (Micro-inch)
EMI Gasket	Conductive Slicon Elastomers	
Contact Pin	Beryllium Copper	Gold 20 Over Nickel 50 Over Copper 50
Insulator	Teflon	
Body	Stainless	Passivated

Product Notes